The adventures of Robin Hood (1)

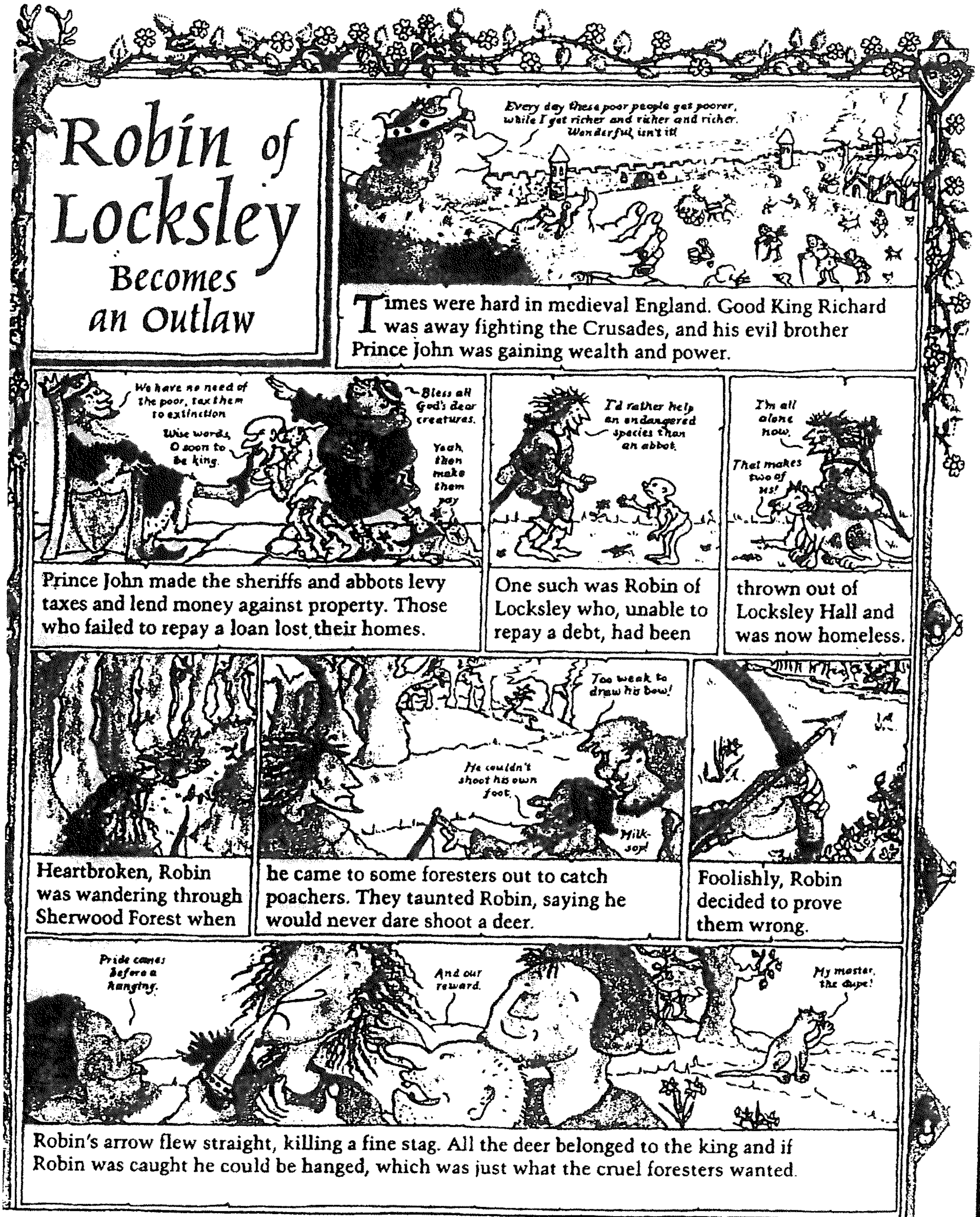

Robin of Locksley Becomes an Outlaw

Times were hard in medieval England. Good King Richard was away fighting the Crusades, and his evil brother Prince John was gaining wealth and power.

Prince John made the sheriffs and abbots levy taxes and lend money against property. Those who failed to repay a loan lost their homes.

One such was Robin of Locksley who, unable to repay a debt, had been thrown out of Locksley Hall and was now homeless.

Heartbroken, Robin was wandering through Sherwood Forest when he came to some foresters out to catch poachers. They taunted Robin, saying he would never dare shoot a deer.

Foolishly, Robin decided to prove them wrong.

Robin's arrow flew straight, killing a fine stag. All the deer belonged to the king and if Robin was caught he could be hanged, which was just what the cruel foresters wanted.

Every day these poor people get poorer, while I get richer and richer and richer. Wonderful, isn't it!
We have no need of the poor, tax them to extinction
Wise words, O soon to be king.
Bless all God's dear creatures.
Yeah, then make them pay
I'd rather help an endangered species than an abbot.
I'm all alone now.
That makes two of us!
Too weak to draw his bow!
He couldn't shoot his own foot.
Milk-sop!
Pride comes before a hanging.
And our reward.
My master, the dupe!

© 1995, Marcia Williams.

Name:

Skimming and scanning for literal meaning

The adventures of Robin Hood (2)

1. Who was the ruler of medieval England while his brother was away?

2. What did Prince John say about the poor?

3. What happened to Robin when he got into debt?

4. Where was Robin challenged to shoot a deer?

5. What did Robin do to prove the foresters were wrong about him?

6. Your question:

   Your answer:

7. Your question:

   Your answer:

Great times

- Multiply the numbers in the columns by 10 or by 100.
- Write the answers in words.

	M	Hth	Tth	Th	H	T	U		
1.				4	6	3	0	x 10 =	Forty-six thousand, three hundred
2.			8	2	4	0	0	x 10 =	
3.			4	7	0	2	7	x 10 =	
4.		6	0	0	0	3	4	x 10 =	
5.		8	7	0	5	0	1	x 10 =	
6.		1	0	0	6	0	9	x 10 =	

	M	Hth	Tth	Th	H	T	U		
7.					3	9	1	x 100 =	
8.				6	2	0	5	x 100 =	
9.			5	0	9	0	0	x 100 =	
10.			4	0	0	0	6	x 100 =	
11.			3	3	0	3	3	x 100 =	

Now try this!

- Use the digits 6, 2, 0, 8 and 1 to make six five-digit numbers.
- Multiply each number by 100.
- Write the answers in words.

Teachers' note Discuss with the children how the digits move across the columns when numbers are multiplied by 10 and 100. Some children may need to write the number in figures before writing it in words.

© A & C Black 2000

Dividing paths

- **Divide the number in each house by 10, 100 and 1000.**

1.

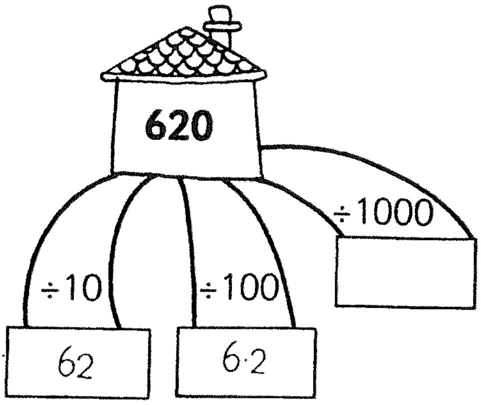
620
÷10
÷100
÷1000
62
6·2

2.

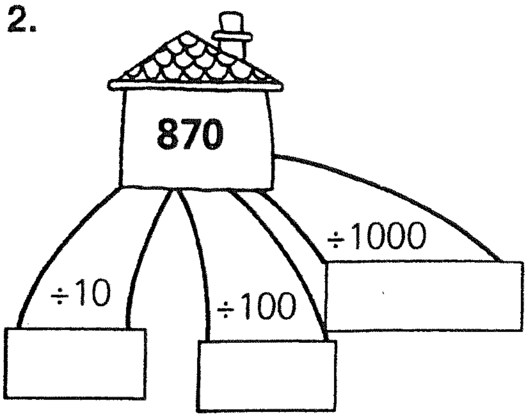
870
÷10
÷100
÷1000

3.

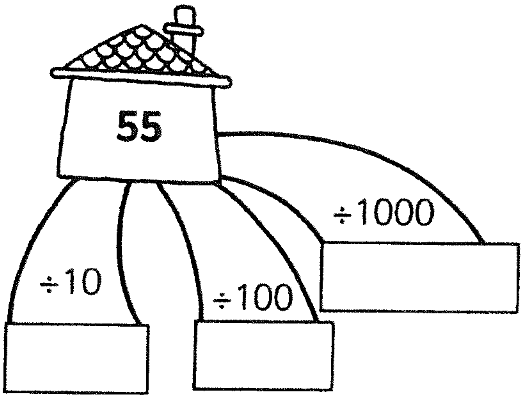
55
÷10
÷100
÷1000

4.

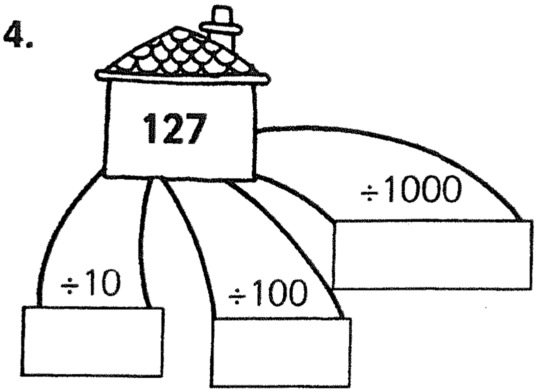
127
÷10
÷100
÷1000

5.

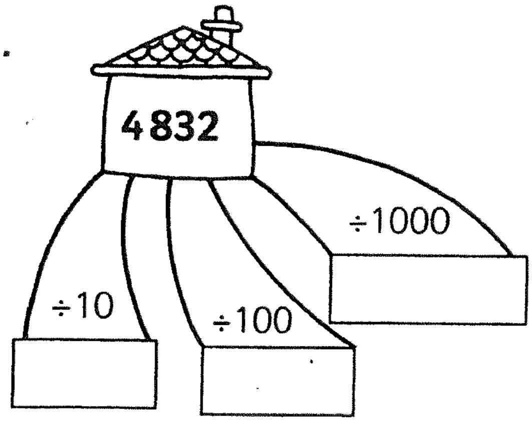
4832
÷10
÷100
÷1000

6.

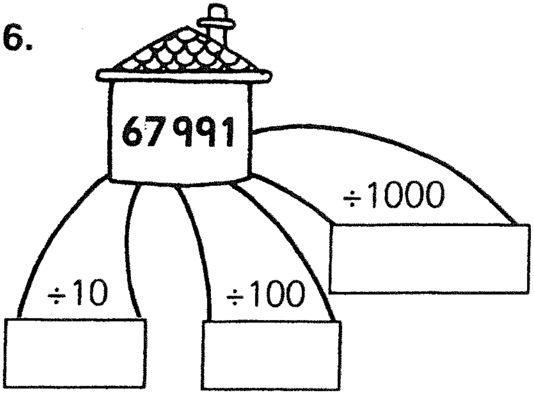
67991
÷10
÷100
÷1000

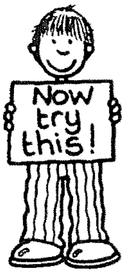
Now try this!

- **Write the correct numbers on these houses.**

1.

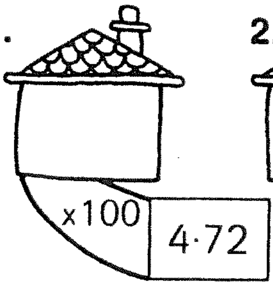

2.

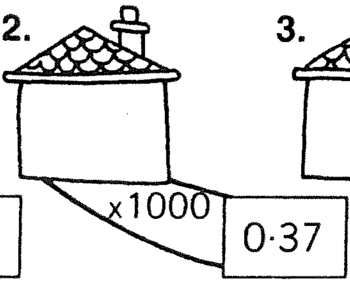

3.

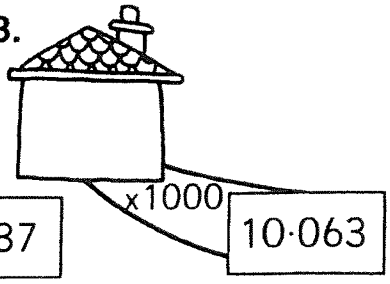
x1000
10·063

Teachers' note To introduce the activity, explain with examples that division is the inverse of multiplication. In the extension activity, the children need to use division to work out what number leads to the number at the end of the path.

**Developing Numeracy
Numbers and the Number System
Year 6**

© A & C Black 2000